DO NOT SCALE DRAWING

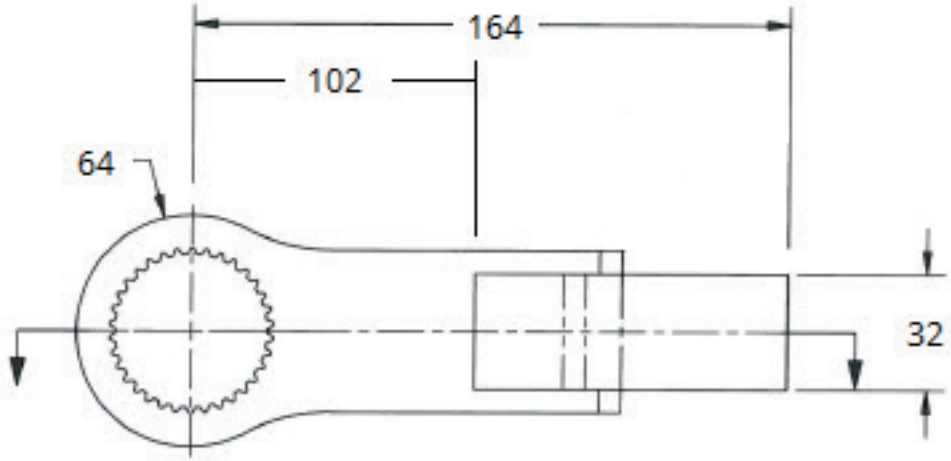

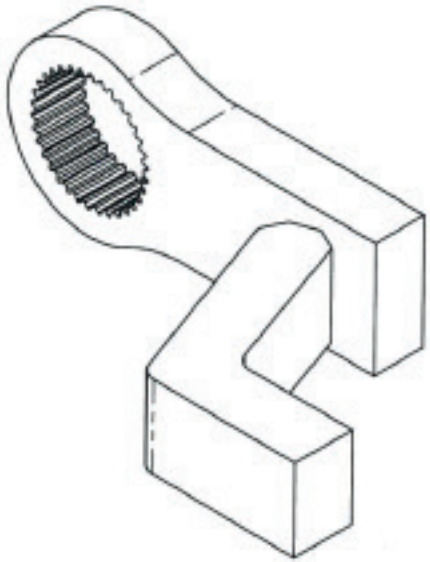

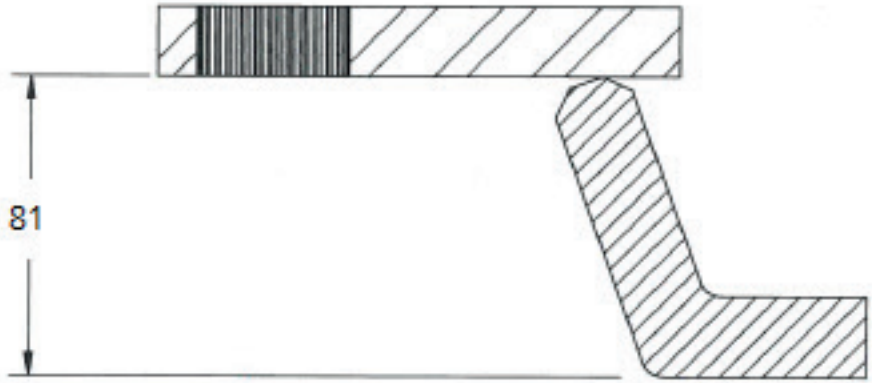

SUITABLE FOR NOSE EXTENSION 2000

		ENG.	E.C.O.	YY.MM.DD	UNLESS OTHERWISE SPECIFIED DIMENSIONS ARE IN MM					
						MATERIAL				
						WEIGHT				
							NAME	YY.MM.DD		
					RAD TORQUE SYSTEMS				TITLE RA 2000 X1=102 X2=164 Y=81 STANDARD	
									Third Angle Projection DWG. NO. 19772	REV. SHT. SZ.